Science of Cambridge MK14 Memory Map

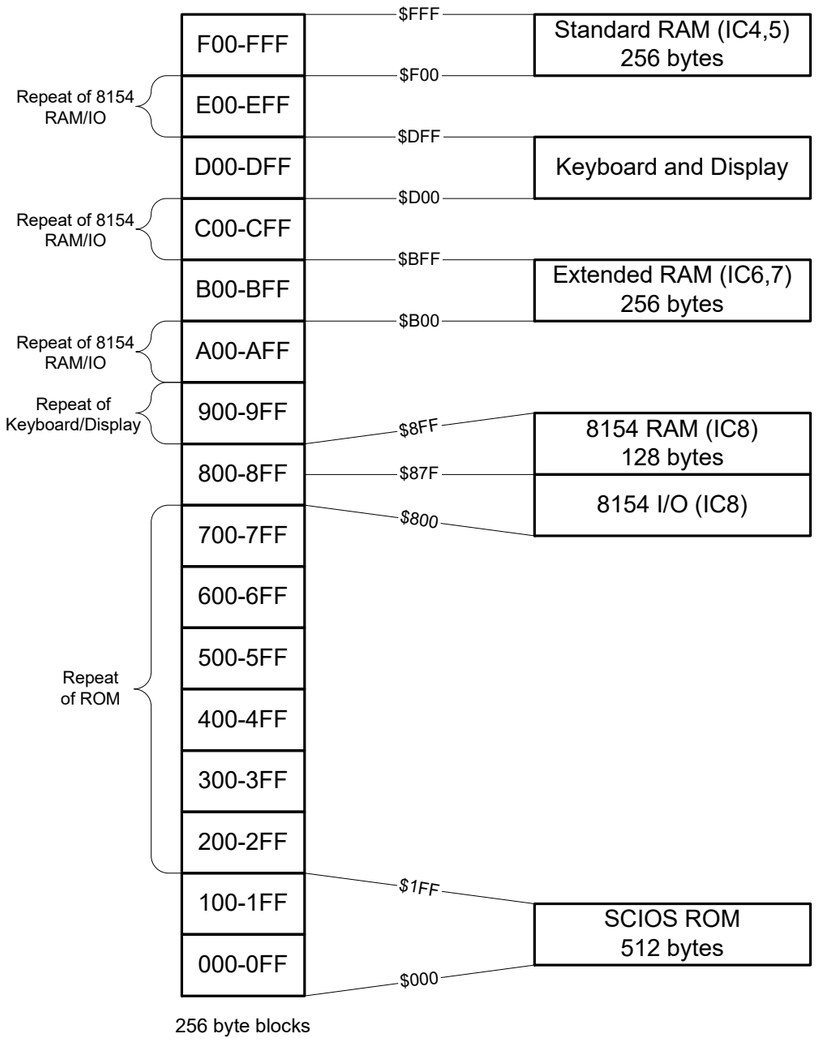

Notes:

- Repeated images of ROM and RAM present on early versions but not in later versions (5 onwards ?) which have improved address decoding

MK14E Memory Map

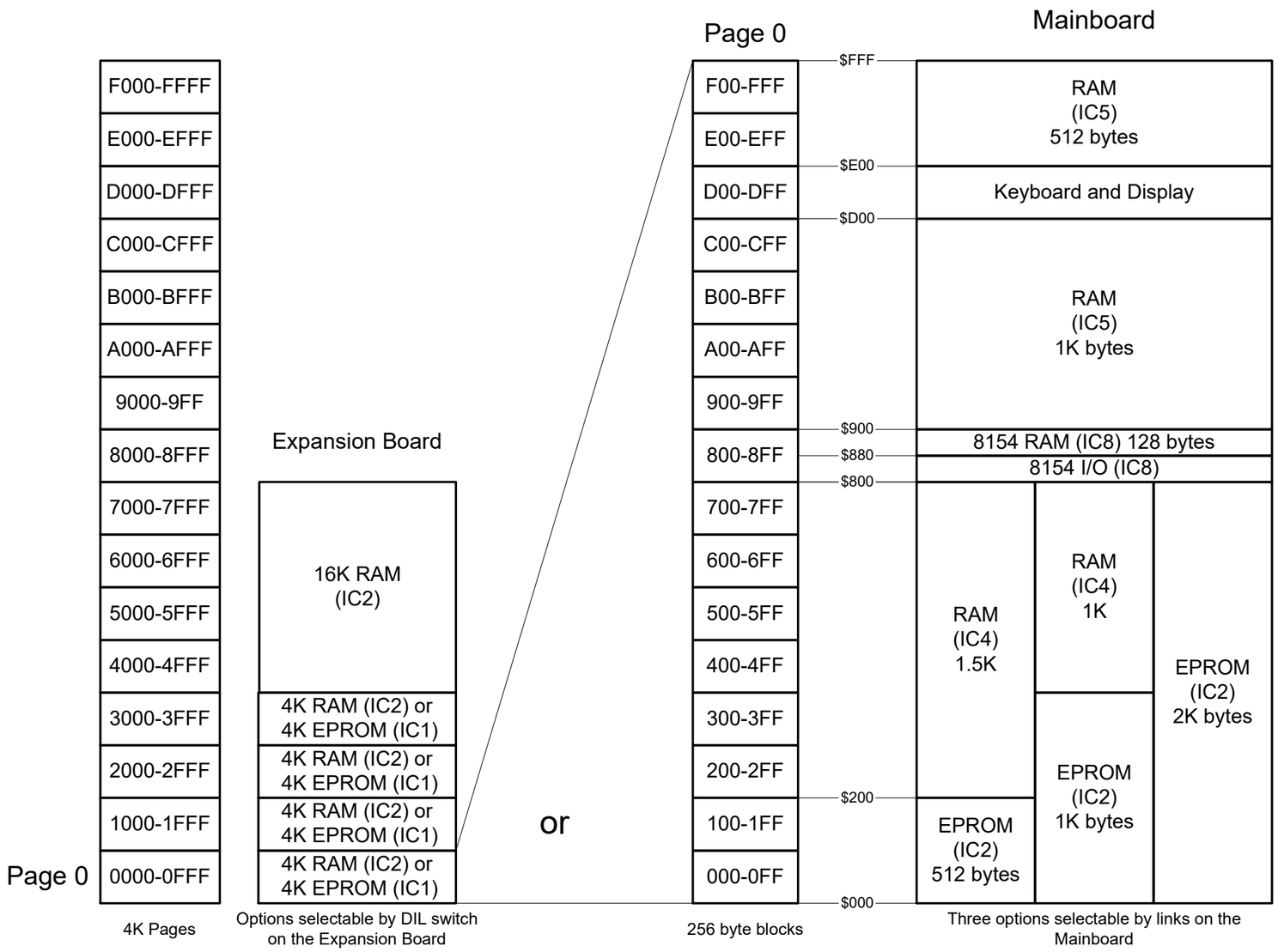

ACORN System 1 Memory Map

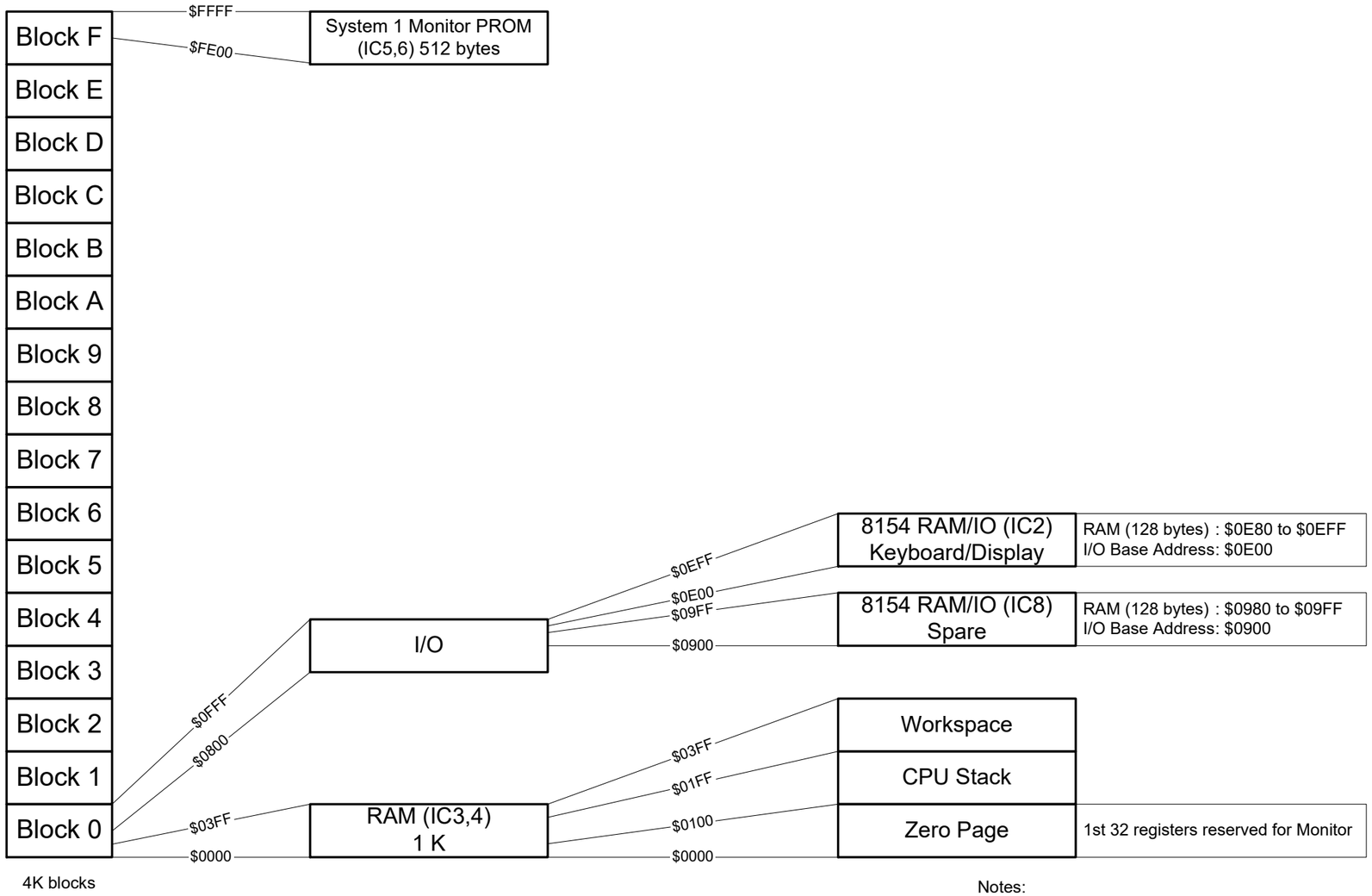

Notes:

- Configured with 1K RAM and both 8154 fitted.
- ROM, 8154 I/O & RAM appear at other addresses, only address's used by Monitor are shown.

Trainer System 1 Memory Map

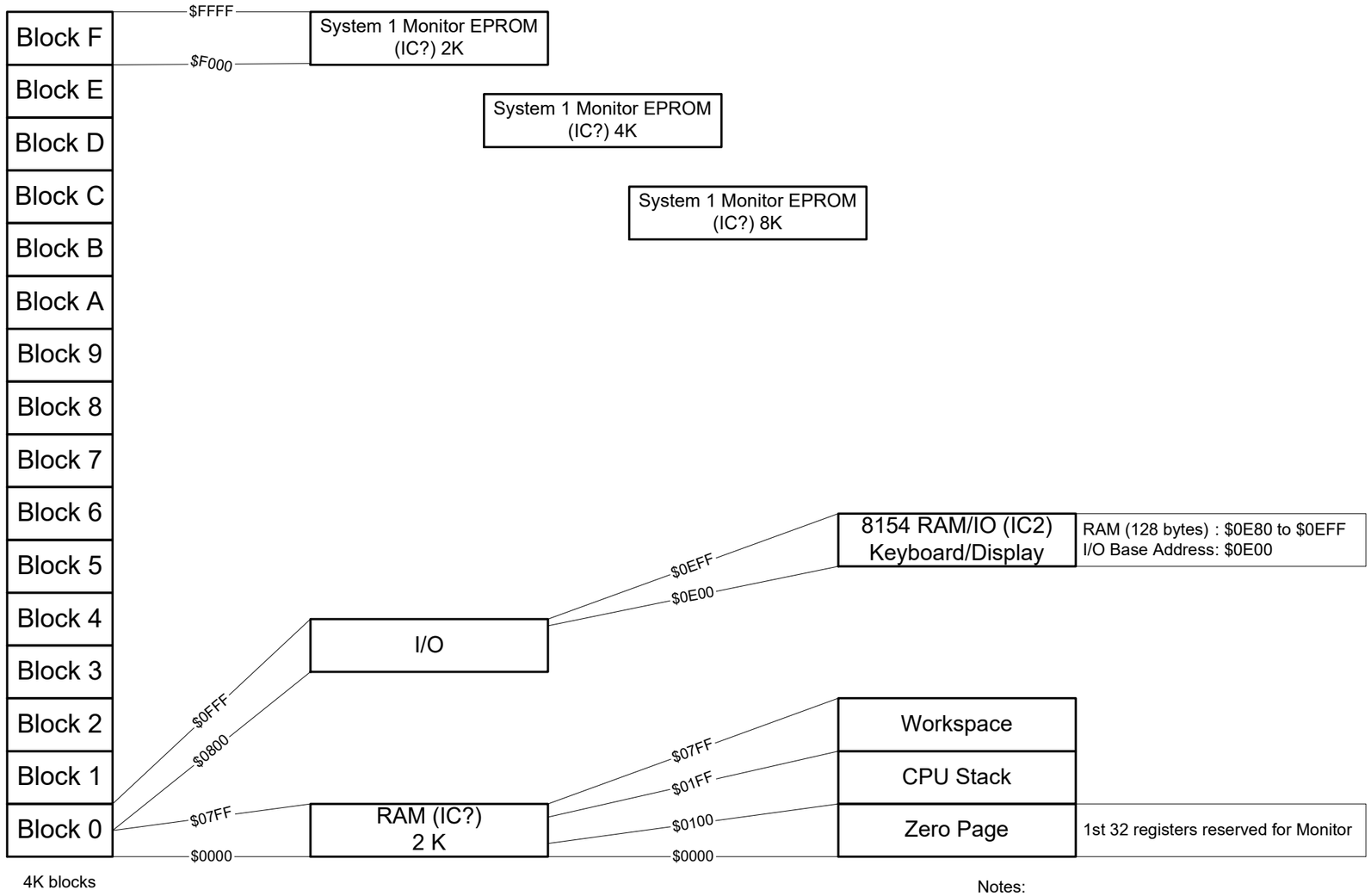

Notes:

- Configured with 1K RAM and both 8154 fitted.
- ROM, 8154 I/O & RAM appear at other addresses, only address's used by Monitor are shown.

ACORN System 2/2A Memory Map

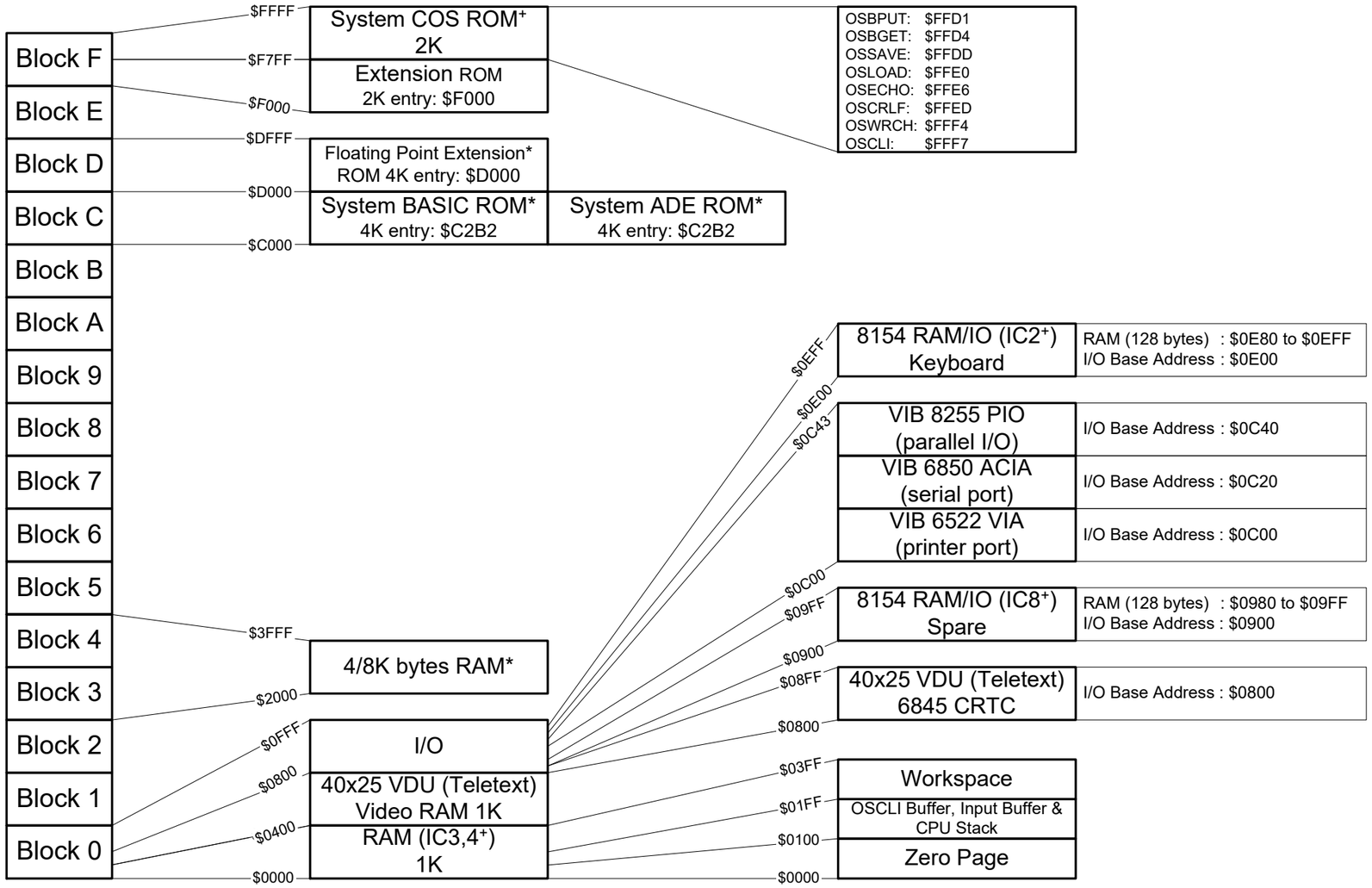

Notes:
+ located on 6502 CPU Board
* located on 8K RAM + 8K ROM Board

ACORN System 3/3A Memory Map

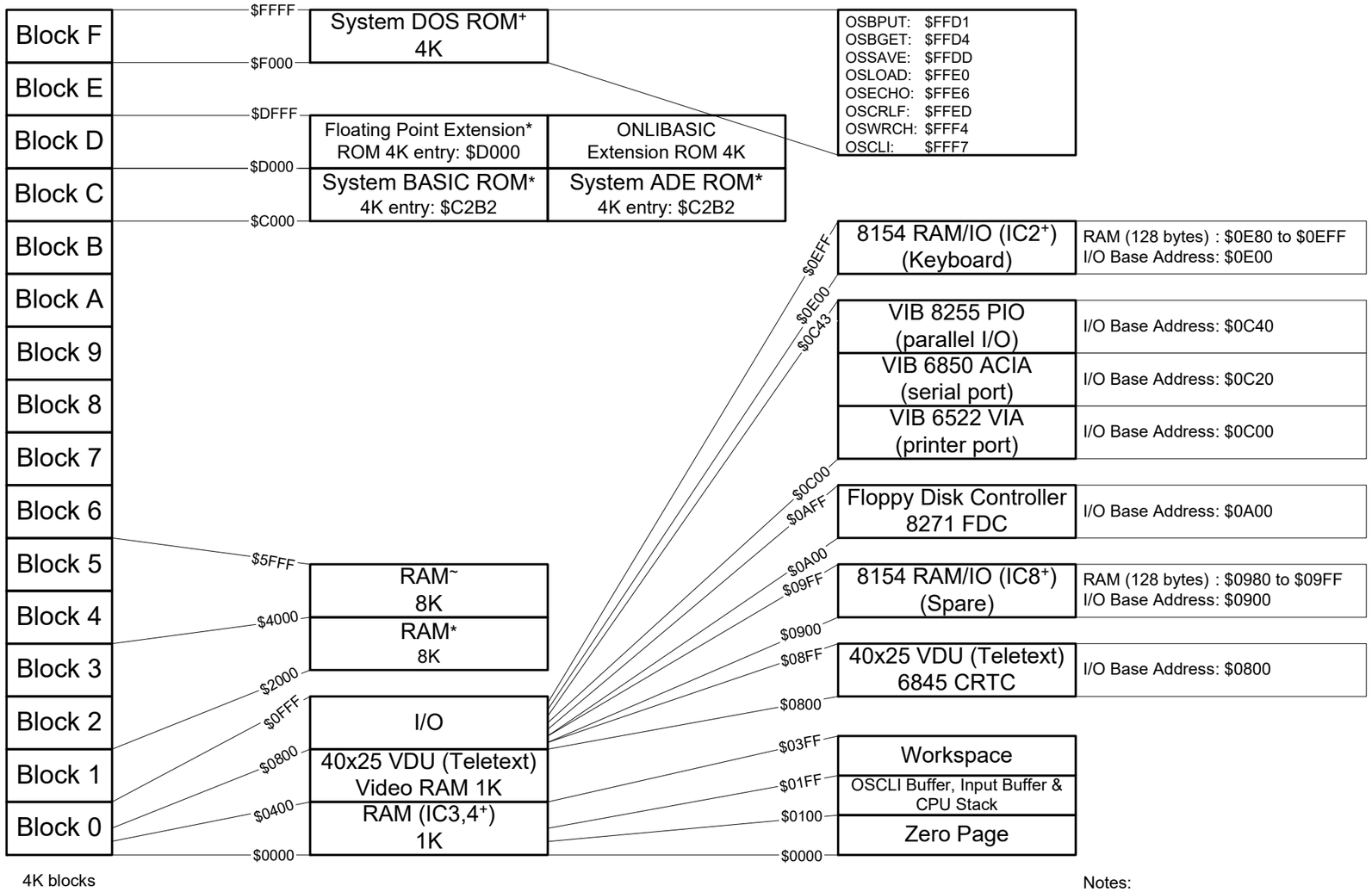

4K blocks

Notes:
+ located on 6502 CPU Board
* located on 8K RAM + 8K ROM Board
~ optional 2nd 8K RAM + 8K ROM Board

ACORN System 4A Memory Map

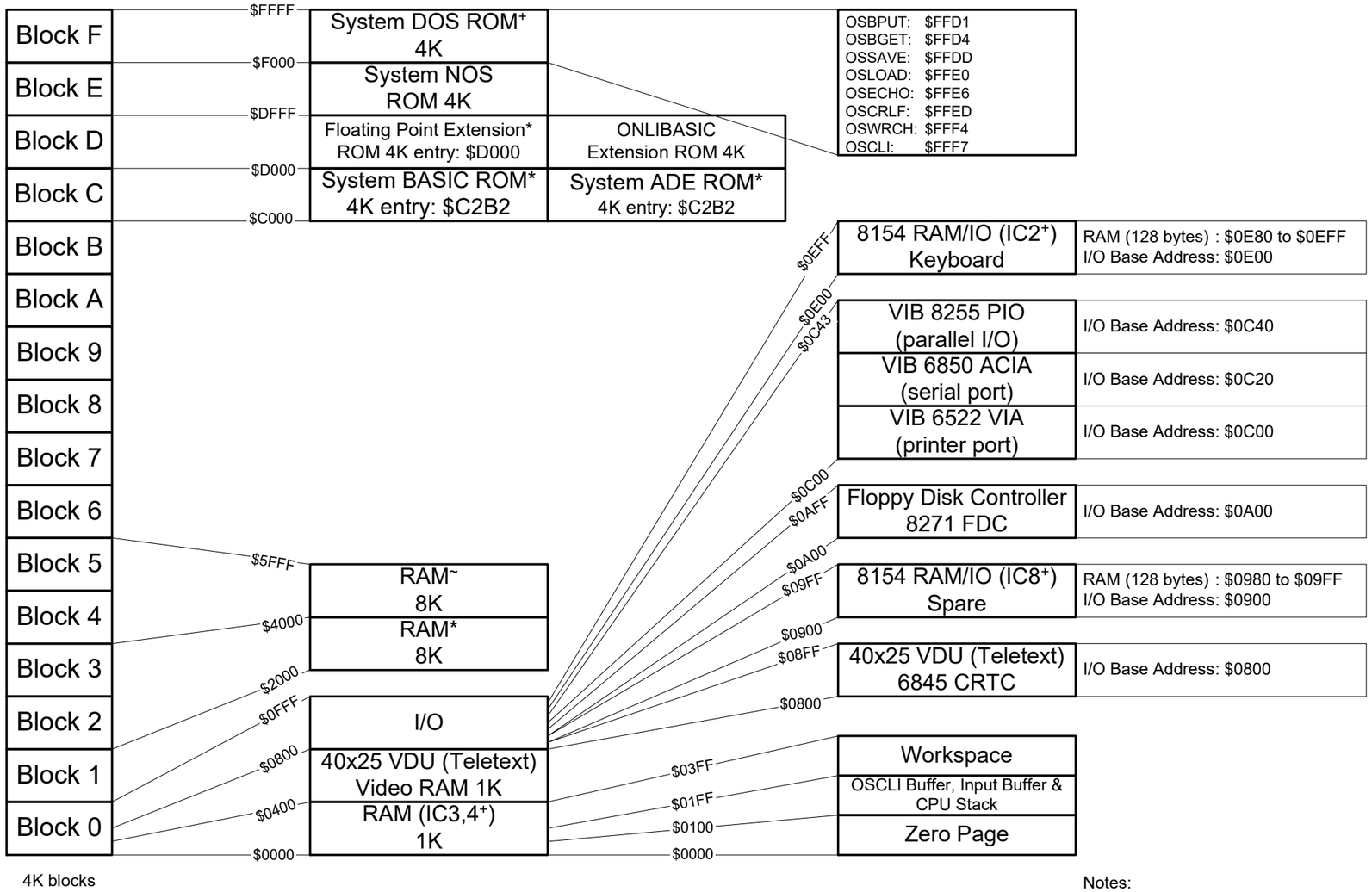

Notes:
+ located on 6502 CPU Board
* located on 8K RAM + 8K ROM Board
~ optional 2nd 8K RAM + 8K ROM Board

ACORN System 5 Memory Map

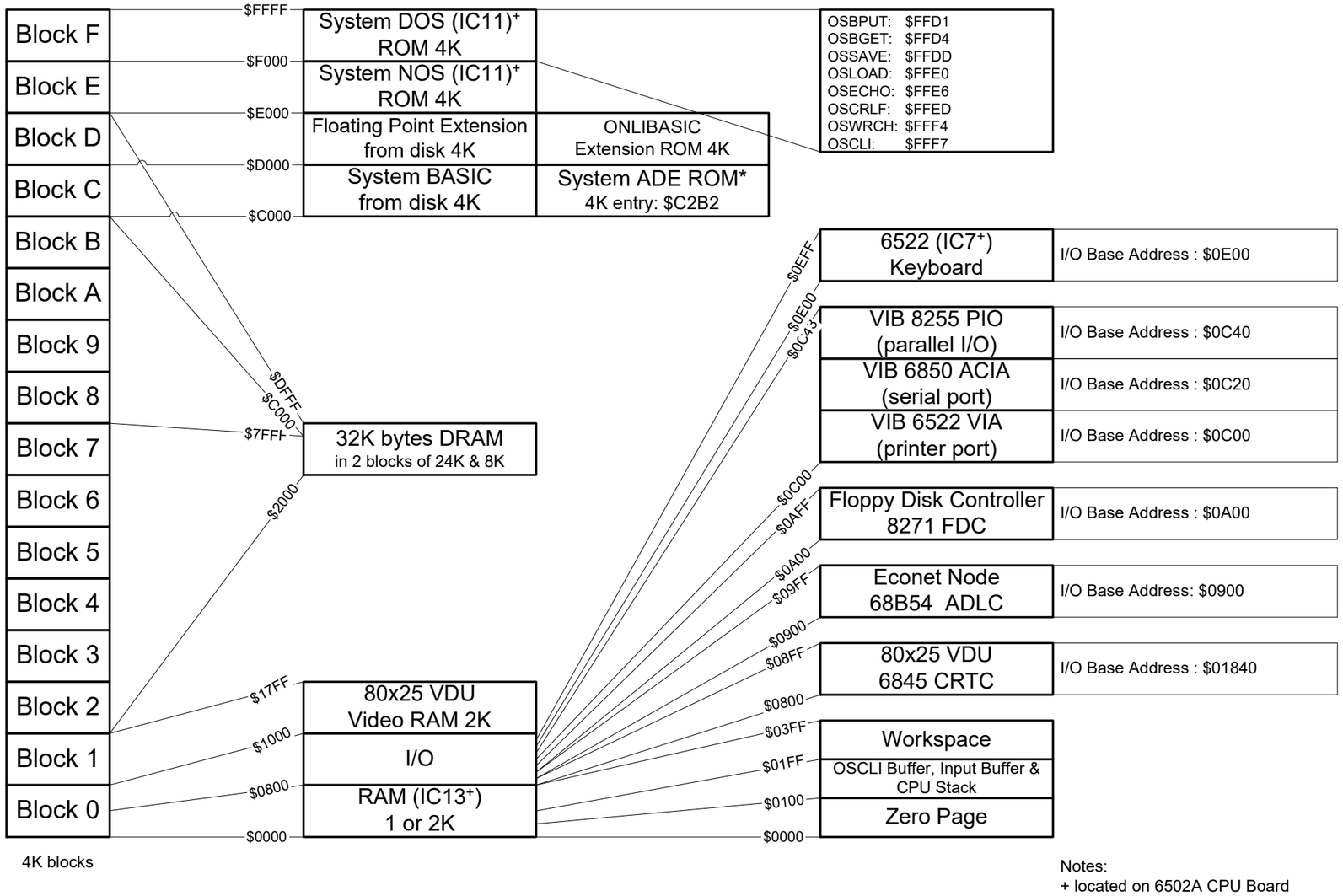

Notes:
+ located on 6502A CPU Board

ACORN 6809 System Memory Map

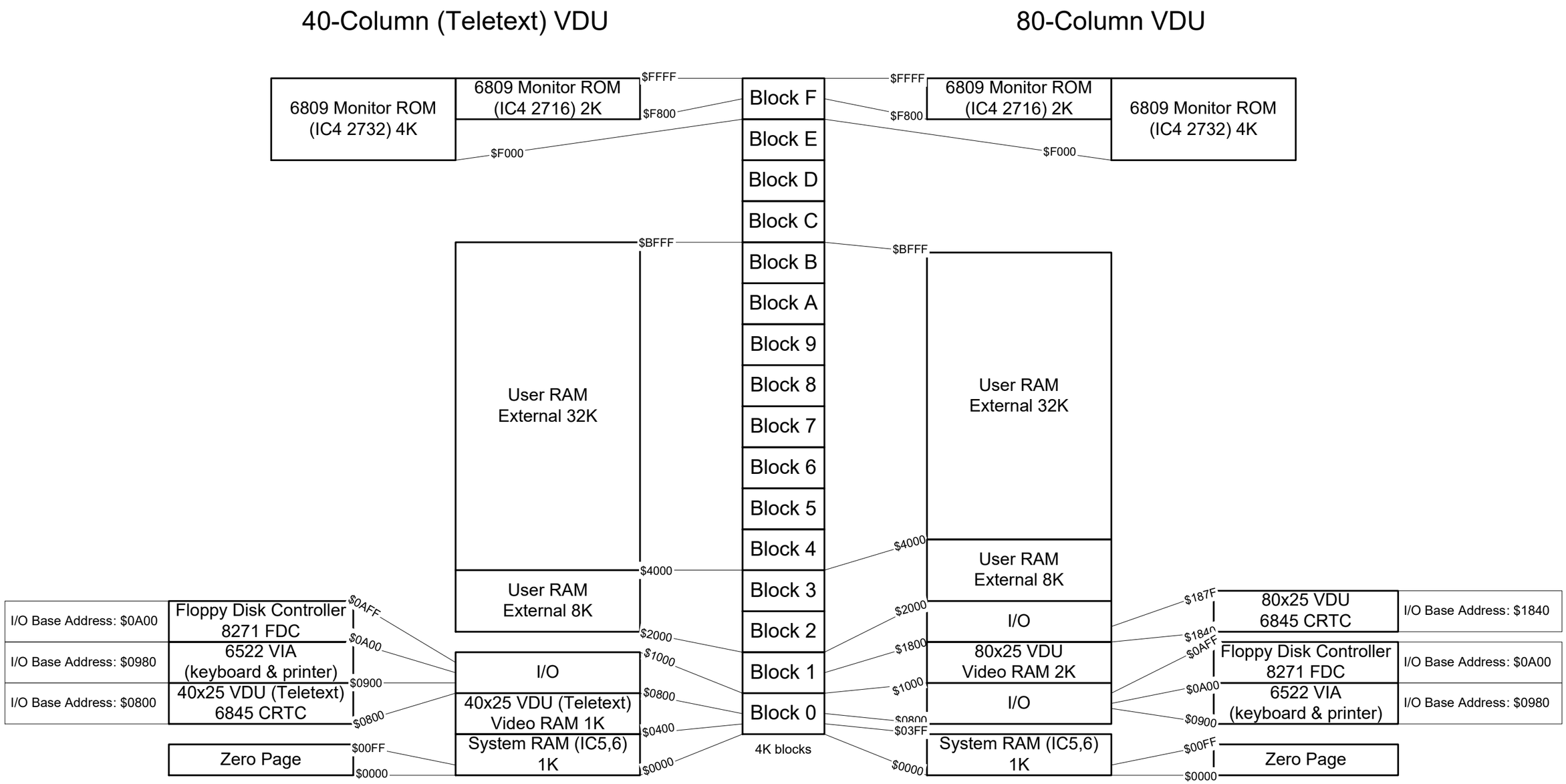

Notes:

- System RAM is used by the Acorn Monitor
- User RAM is for the User's programs
- It is possible to have both VDU's fitted at the same time !

ACORN 6809 FLEX Memory Map

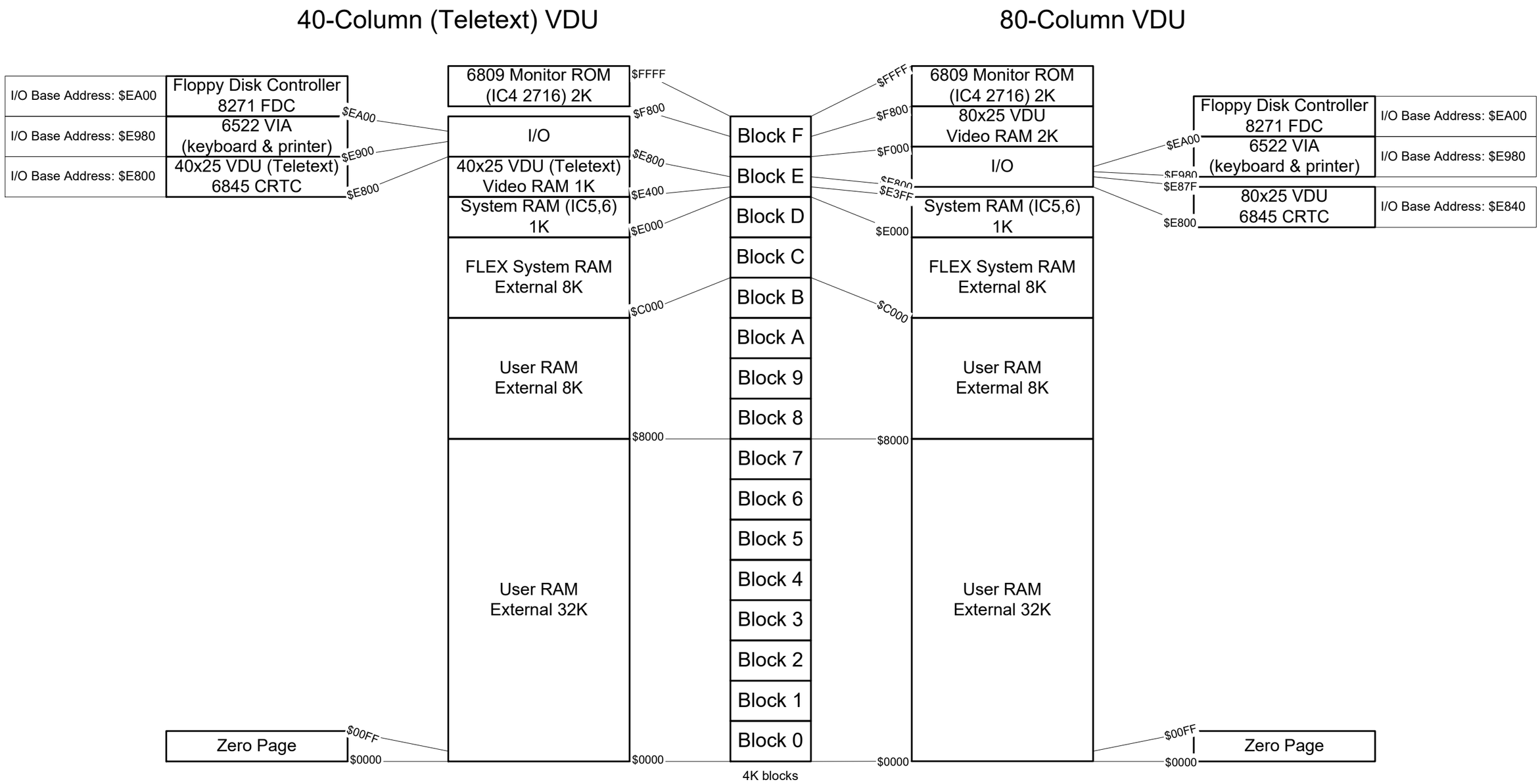

Notes:

- System RAM is used by the Acorn Monitor
- FLEX System RAM is for FLEX
- User RAM is for the Users programs
- Do not fit both VDU's at the same time !

ACORN Atom Memory Map

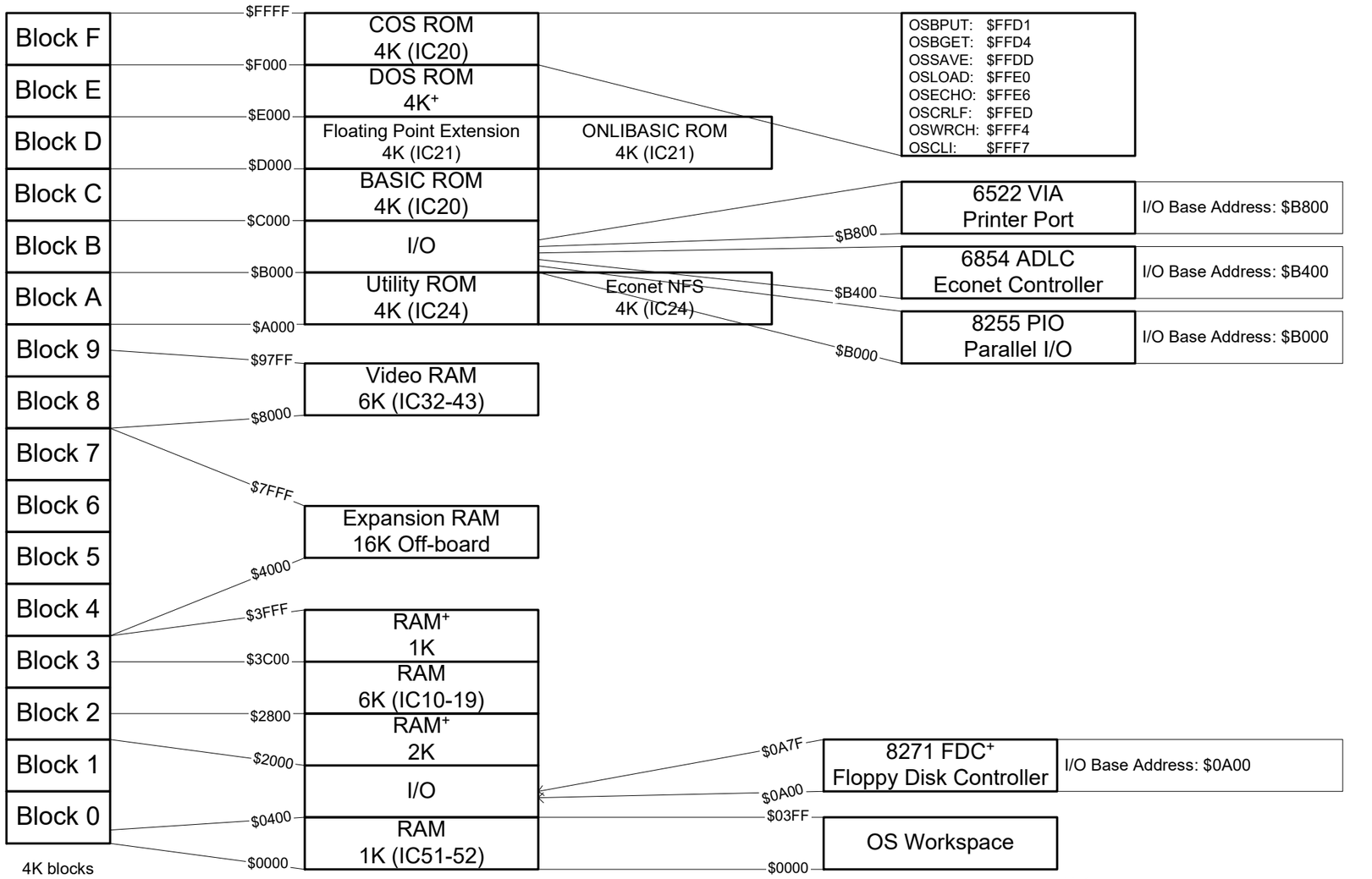

Notes:
+ located on Floppy Disk Controller Board

Replica Atom Memory Map

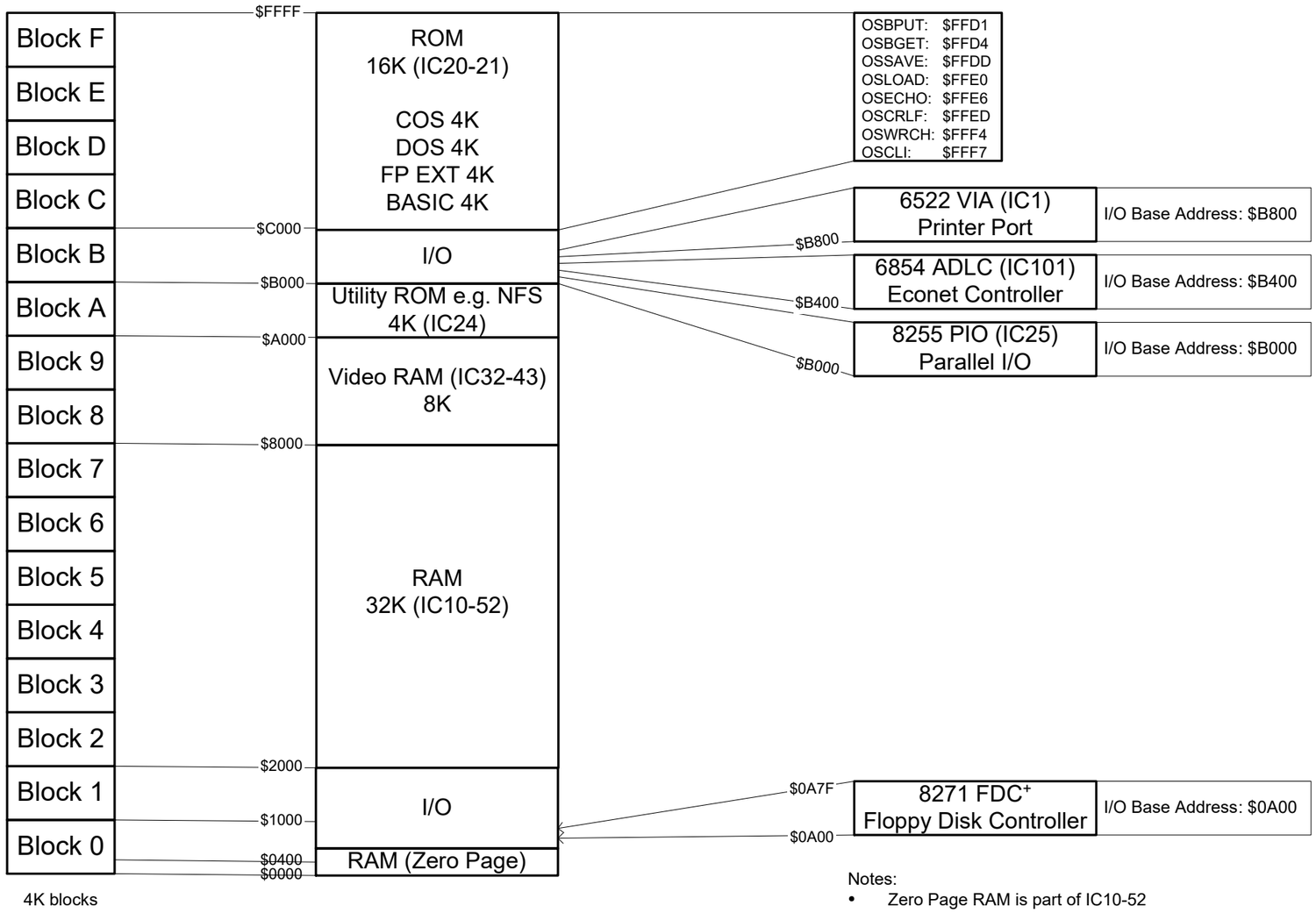

Notes:

- Zero Page RAM is part of IC10-52

BBC Computer Memory Map

SOFTY 1 Memory Map

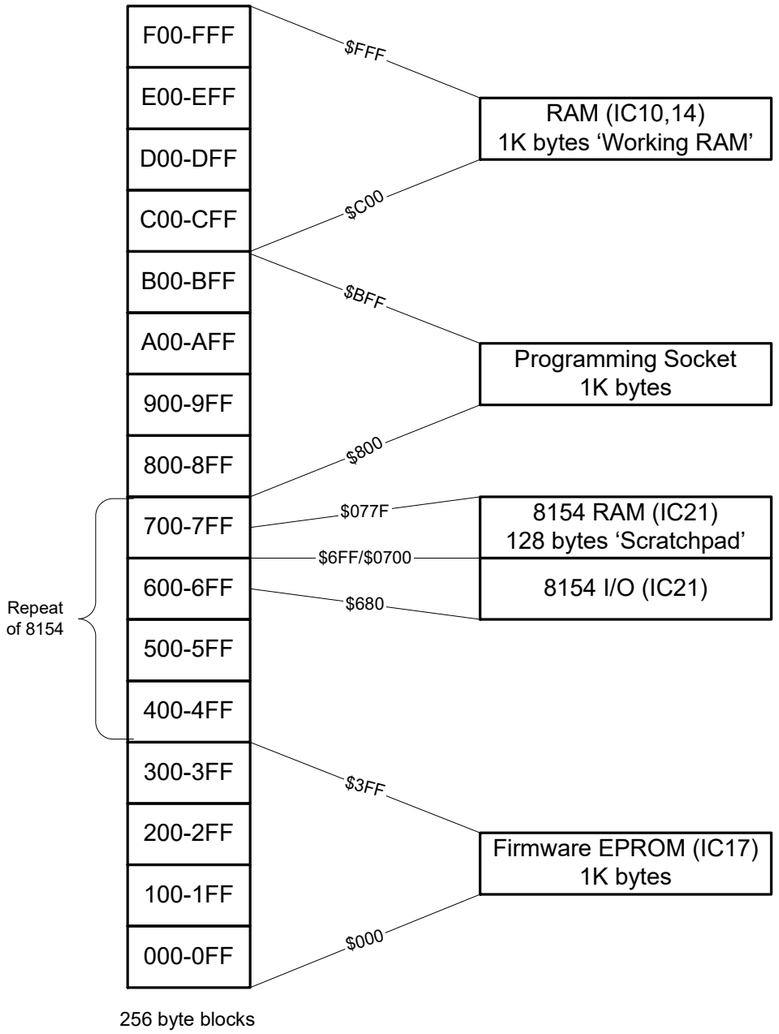

Notes:

- A7 driving the 8154 M/IO pin is inverted hence RAM and I/O are swapped from normal.
- The 8154 repeats 4 times because of incomplete address decoding, typically addressed as shown here.
- Only half of 'Working RAM' is displayed on the screen at any one time.

SOFTY 2 Memory Map

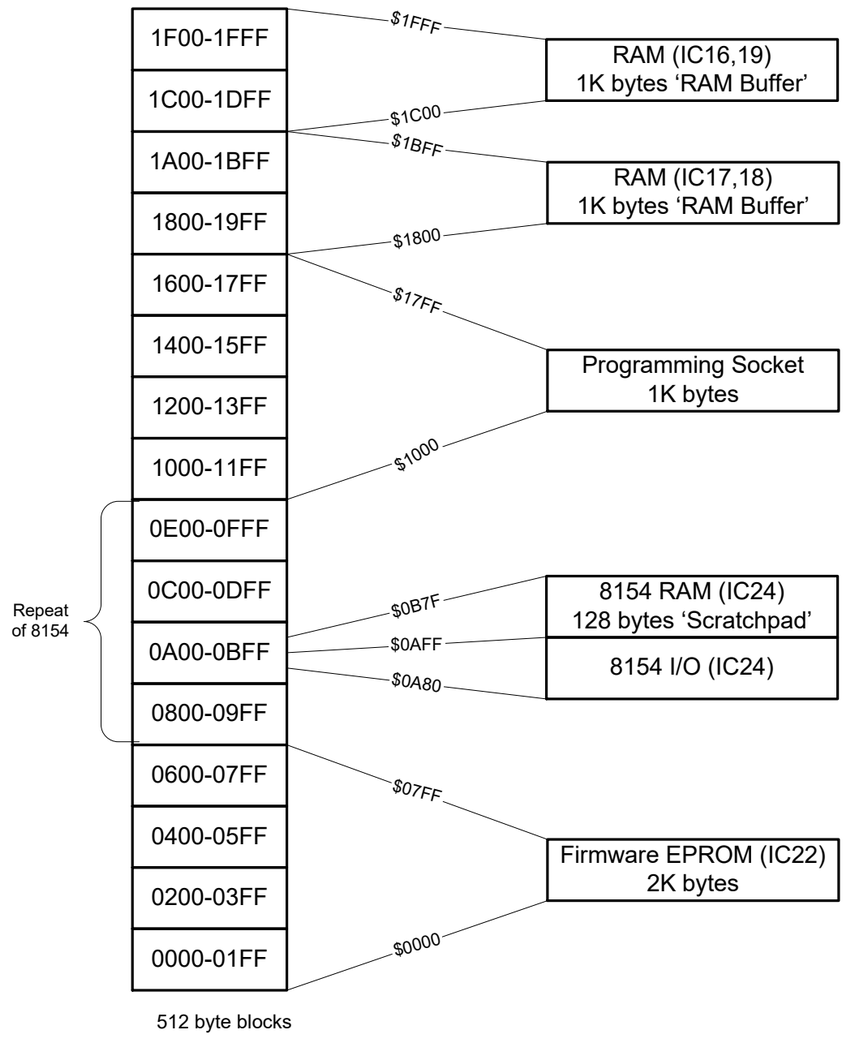

Notes:
A7 driving the 8154 M/IO pin is inverted hence RAM and I/O are swapped from normal.
The 8154 repeats 8 times because of incomplete address decoding, typically addressed as shown here.