RevNo	Revision note	Date	Signature	Checked

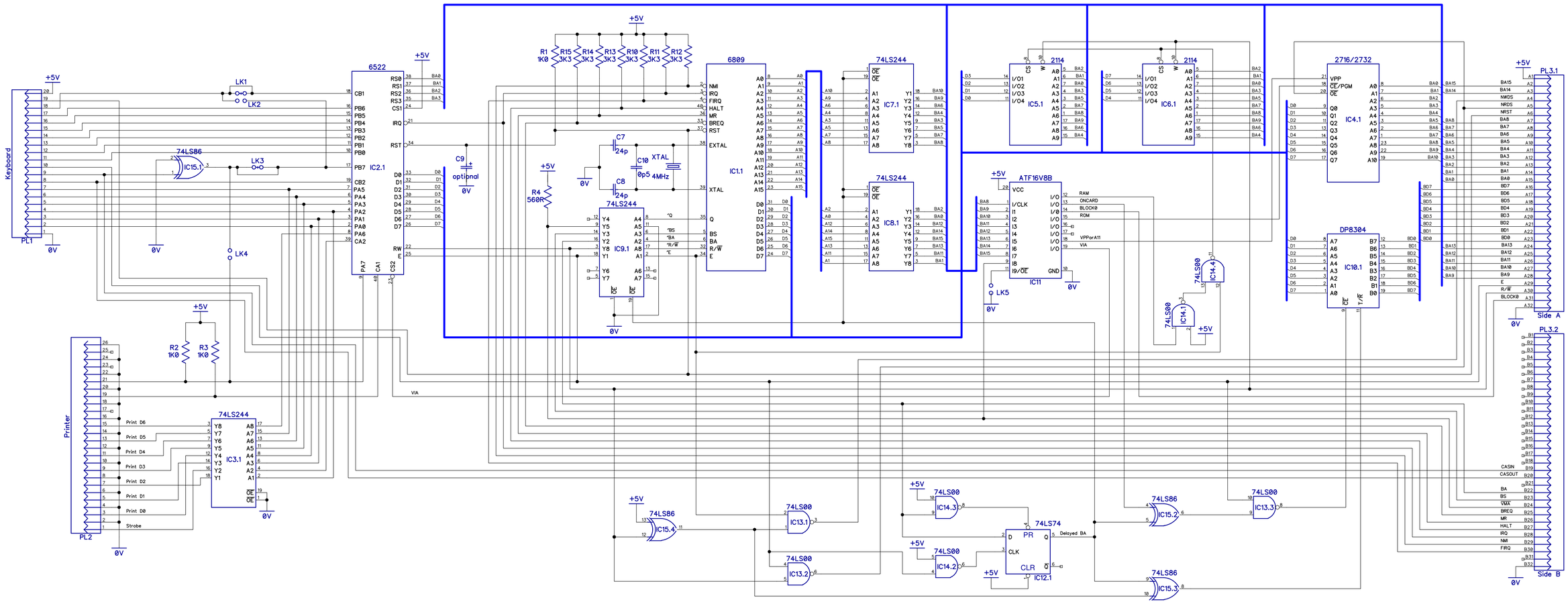

Itemref	Quantity	Title/Name, designation, material, dimension etc	Article No./Reference
Drawn by: CDO		Filename: 6809 CPU Board (16V8).dch	Date: 20th September 2022 / Scale 1:25

6809 CPU Board
Based on Issue 2 Schematic
with PAL Address Decode

Sheet 1/1