RevNo	Revision note	Date	Signature	Checked

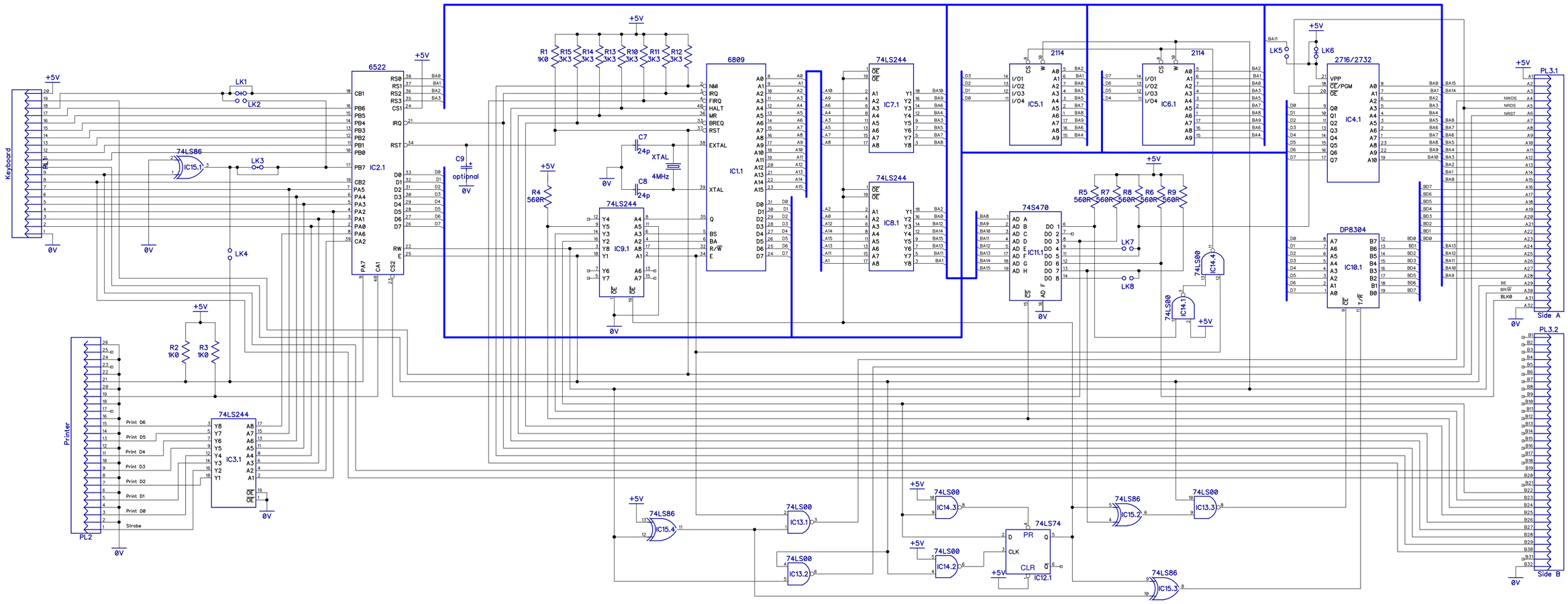

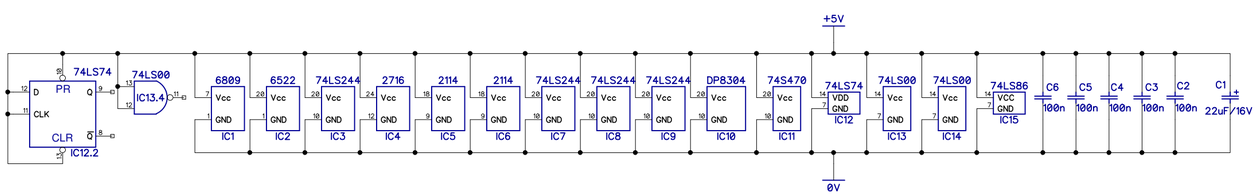

Itemref	Quantity	Title/Name, designation, material, dimension etc	Article No./Reference

Drawn by: CDO		Filename: 6809 CPU Board (74S470).dch	Date: 5th July 2025
			Scale 1:1

6809 CPU Board
Based on Issue 2 Schematic

Sheet 1/1