RevNo	Revision note	Date	Signature	Checked

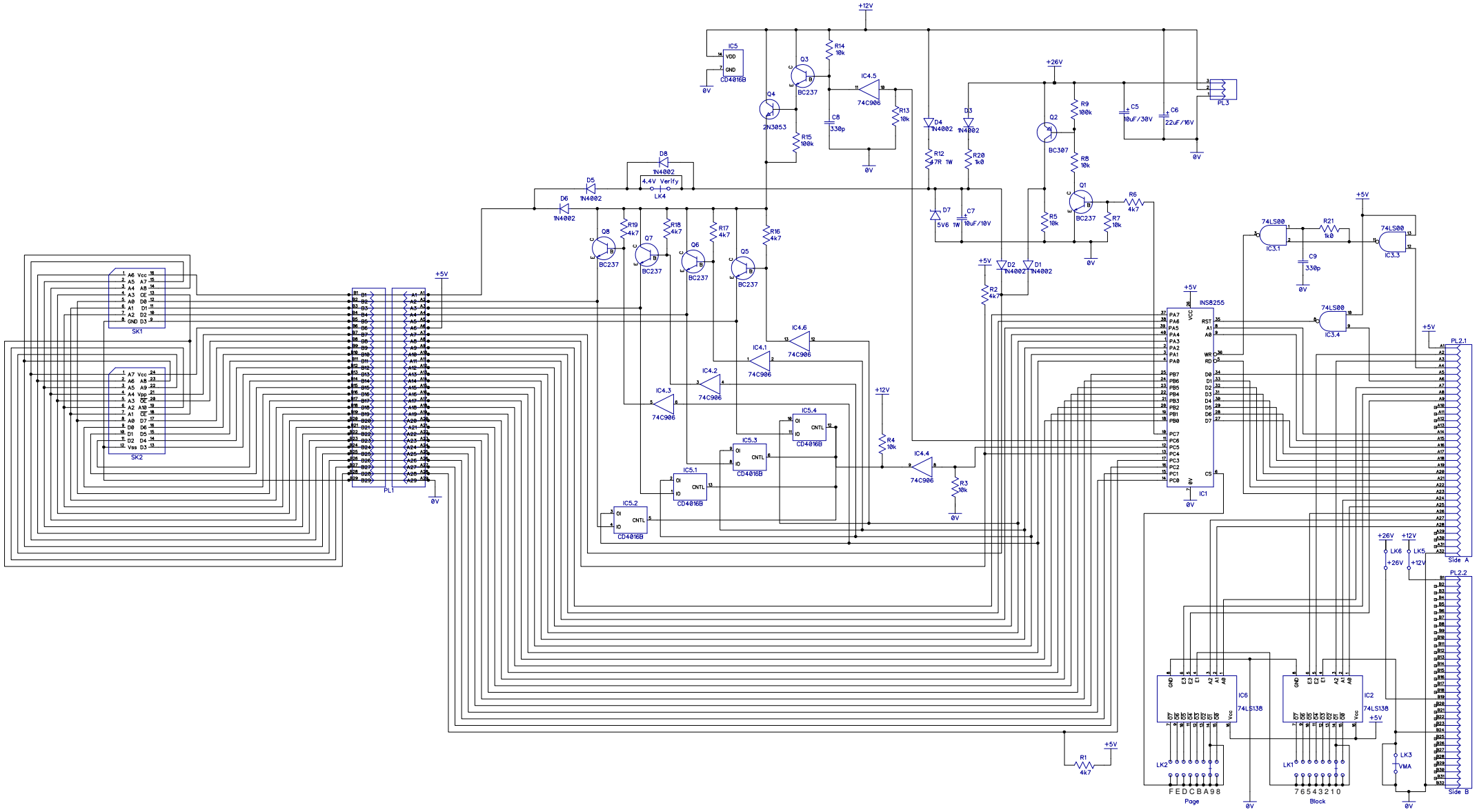

Itemref	Quantity	Title/Name, designation, material, dimension etc	Article No./Reference
Redrawn by: CDO		File name: PROM Programmer Board.dch	Date: 16 February 2020 / Scale 1:1
PROM Programmer Board based on issue 1 schematic			Sheet 1/1